A1

THIS DRAWING MAY ONLY BE USED IN THE COURSE OF AND FOR THE PURPOSE OF CREATING SYDNEY WATER ASSETS. USE THIS DRAWING WITH CARE. THE USER IS RESPONSIBLE FOR THE CORRECT APPLICATION OF THIS DRAWING. DEEMED TO COMPLY DRAWINGS ARE SUBJECT TO TERMS AND CONDITIONS OF USE AS PUBLISHED BY SYDNEY WATER.

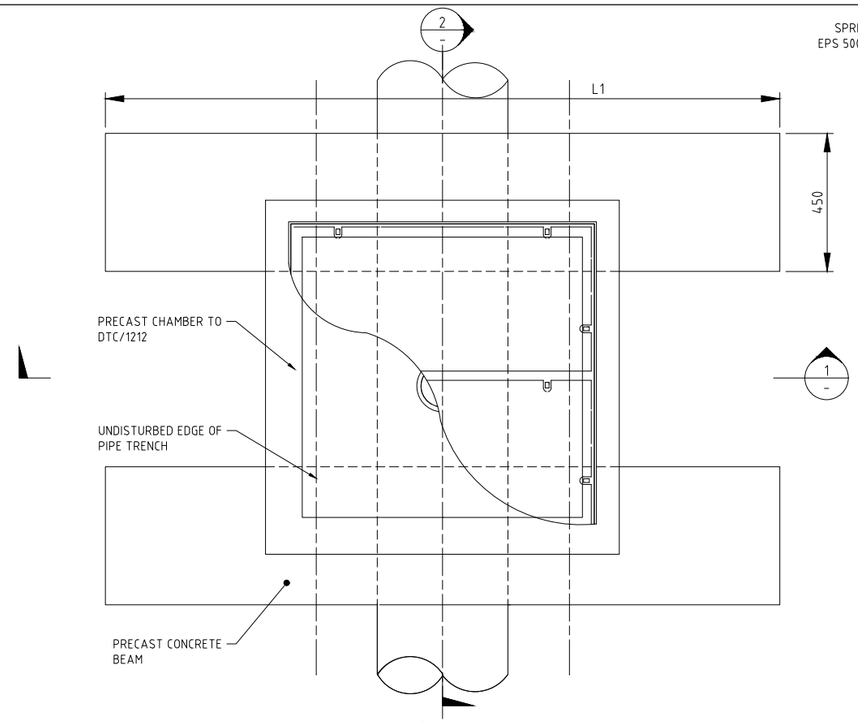

PLAN
SCALE 1:10

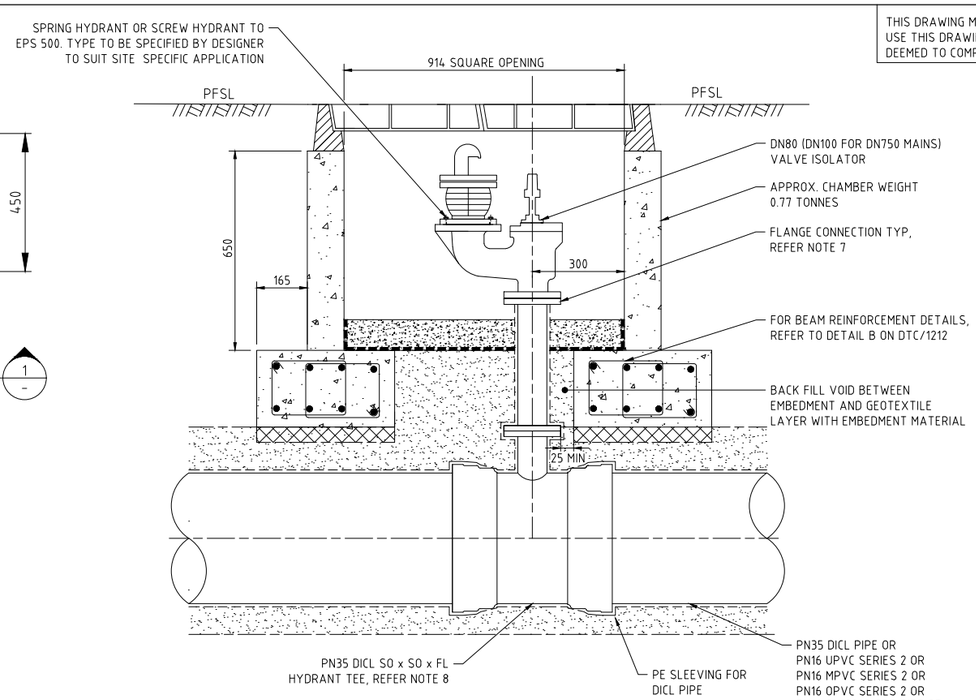

SECTION 2 -
SCALE 1:10

NOTES:

1. THIS DRAWING MUST BE READ IN CONJUNCTION WITH DTC/1100.
2. GEOTEXTILE LAYER TO MEET CLASS C STRUCTURAL AND CLASS 4 PERMEABILITY PARAMETERS AS DETAILED IN THE TfNSW QUALITY SPECIFICATION R67.
3. PRE-CAST CONCRETE CHAMBER DESIGNED TO SM1600 LOADS OF AS 5100.2. DESIGN LOAD FOR PRE-CAST CONCRETE SUPPORT BEAM BASED ON AS3996 - CLASS C RATING FOR FOOTWAY AND CLASS D RATING FOR CARRIAGE-WAY APPLICATIONS.
4. FOUNDATION CONDITIONS MUST BE TO FOUNDATION NOTES ON DTC/1100.
5. PIPELINE DESIGN BASED ON MAXIMUM DESIGN PRESSURE OF 120m AND TEST PRESSURE OF 150m OF WATER.
6. PRECAST CONCRETE BEAMS DIMENSIONS "L1" AND "L2" TO BE SHOWN ON WAC DRAWINGS.
7. ALL FLANGES MUST BE TO DTC/1145.
8. ALL DI FITTINGS MUST BE COATED WITH THERMAL-BONDED POLYMERIC COATING.
9. WHERE PROPRIETARY PRODUCTS ARE SPECIFIED, THE PRODUCTS MUST BE INSTALLED STRICTLY IN ACCORDANCE WITH THE MANUFACTURER'S INSTRUCTIONS.

REFERENCE DRAWINGS:

DTC/1145	WATER MAINS PN16 BURIED FLANGE CONNECTION DETAILS DN100 TO DN750
DTC/1150	STEEL WATER MAINS DN150 TO DN1200 STEEL PIPE JOINTING
DTC/1212	AIR VALVE AND HYDRANT INSTALLATIONS DETAILS WATER MAINS DN375 - DN750

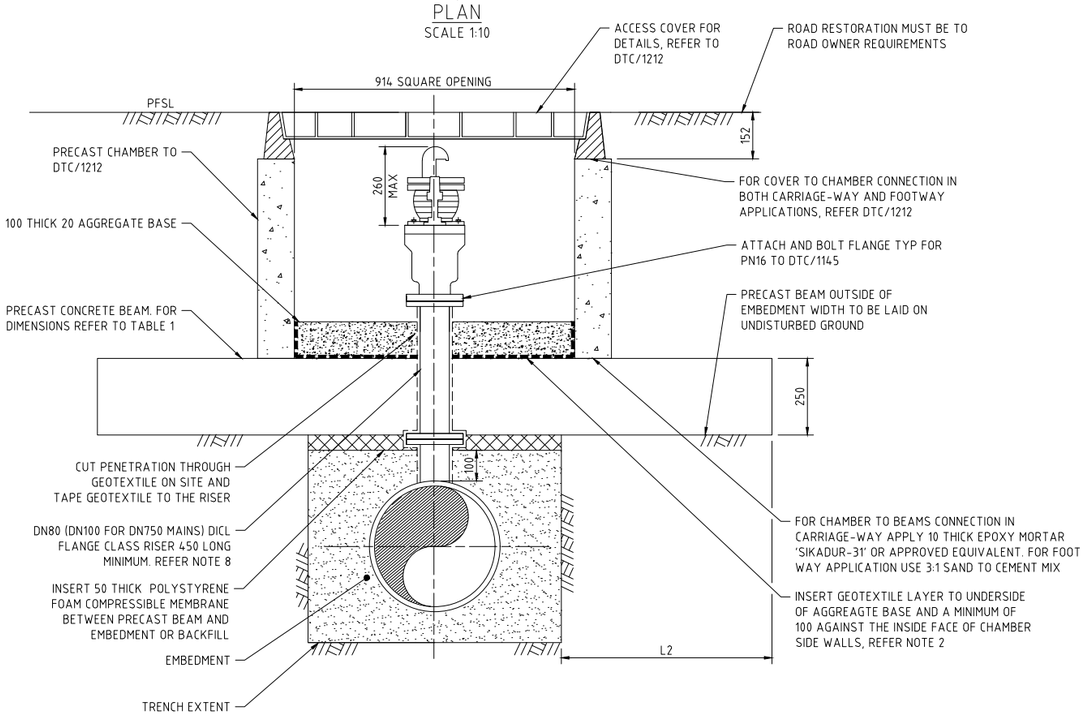

SECTION 1 -
SCALE 1:10

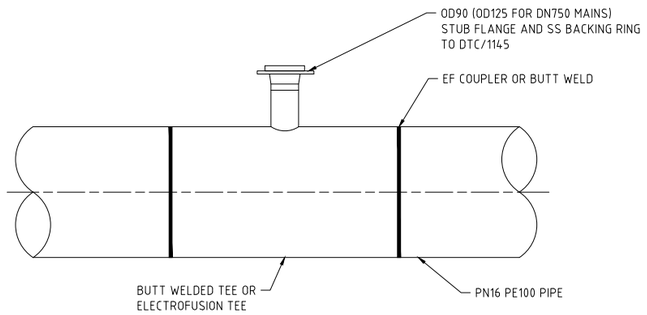

DETAIL A -
SCALE 1:10

TABLE 1 - PRECAST CONCRETE BEAM SIZE

	CARRIAGE-WAY									FOOTWAY					
FOUNDATION MATERIAL - CLAY	FIRM TO STIFF ($C_u \geq 50kPa$) DCP ≥ 9/300mm			STIFF ($C_u \geq 75kPa$) DCP ≥ 12/300mm			VERY STIFF ($C_u \geq 150kPa$) DCP ≥ 18/300mm			FIRM TO STIFF ($C_u \geq 50kPa$) DCP ≥ 9/300mm			STIFF ($C_u \geq 75$ kPa) DCP ≥ 12/300mm		
FOUNDATION MATERIAL - SAND	LOOSE DCP ≥ 5/300mm			MEDIUM DENSE DCP ≥ 8/300mm			MEDIUM DENSE TO DENSE DCP ≥ 15/300mm			LOOSE DCP ≥ 5/300mm			MEDIUM DENSE DCP ≥ 8/300mm		
	TOTAL LENGTH (L1)	SIDE SUPPORT LENGTH (L2)	APPROX WEIGHT (t)	TOTAL LENGTH (L1)	SIDE SUPPORT LENGTH (L2)	APPROX WEIGHT (t)	TOTAL LENGTH (L1)	SIDE SUPPORT LENGTH (L2)	APPROX WEIGHT (t)	TOTAL LENGTH (L1)	SIDE SUPPORT LENGTH (L2)	APPROX WEIGHT (t)	TOTAL LENGTH (L1)	SIDE SUPPORT LENGTH (L2)	APPROX WEIGHT (t)
DN375	3550	1350	1.00	2200	675	0.62	1550	350	0.44	2500	825	0.70	1700	425	0.48
DN450	3600	1350	1.01	2300	675	0.65	1650	350	0.46	2600	825	0.73	1800	425	0.51
DN500	3900	1350	1.10	2550	675	0.72	1900	350	0.53	2850	825	0.80	2050	425	0.58
DN600	4000	1350	1.13	2650	675	0.75	2000	350	0.56	2950	825	0.83	2150	425	0.60
DN750	4150	1350	1.17	2800	675	0.79	2150	350	0.60	3100	825	0.87	2300	425	0.65

DYNAMIC CONE PENETRATION TEST (DCP) TO AS1289.6.3.2. INDICATIVE VALUES SHOWN IN TABLE TO CONFIRM SHEAR STRENGTH (C_u) OF CLAYS OR DENSITY OF SANDS.
TESTS TO BE CARRIED OUT TO A DEPTH NOT LESS THAN 600mm BELOW PRECAST BEAM FOUNDING LEVEL.

Sydney WATER

© COPYRIGHT
STATE OF NEW SOUTH WALES THROUGH SYDNEY WATER CORPORATION. ALL RIGHTS RESERVED

APPROVED
NORBERT SCHAEPER
ENGINEERING MODERNISATION MANAGER

ENGINEERING & TECHNICAL SUPPORT

LETTER	DETAILS OF ISSUE / AMENDMENT	APP'D	DATE
B	GENERAL UPDATE	NS	31/07/24
A	ORIGINAL ISSUE	PJG	01/03/13

DEEMED TO COMPLY DRAWINGS

HYDRANT INSTALLATIONS MAINTENANCE ACCESSIBLE

DI, PVC, GRP, SCL & PE WATER MAINS DN375 - DN750

DTC
1206

ISSUE	DATE
B	31/07/24