A1

THIS DRAWING MAY ONLY BE USED IN THE COURSE OF AND FOR THE PURPOSE OF CREATING SYDNEY WATER ASSETS. USE THIS DRAWING WITH CARE. THE USER IS RESPONSIBLE FOR THE CORRECT APPLICATION OF THIS DRAWING. DEEMED TO COMPLY DRAWINGS ARE SUBJECT TO TERMS AND CONDITIONS OF USE AS PUBLISHED BY SYDNEY WATER.

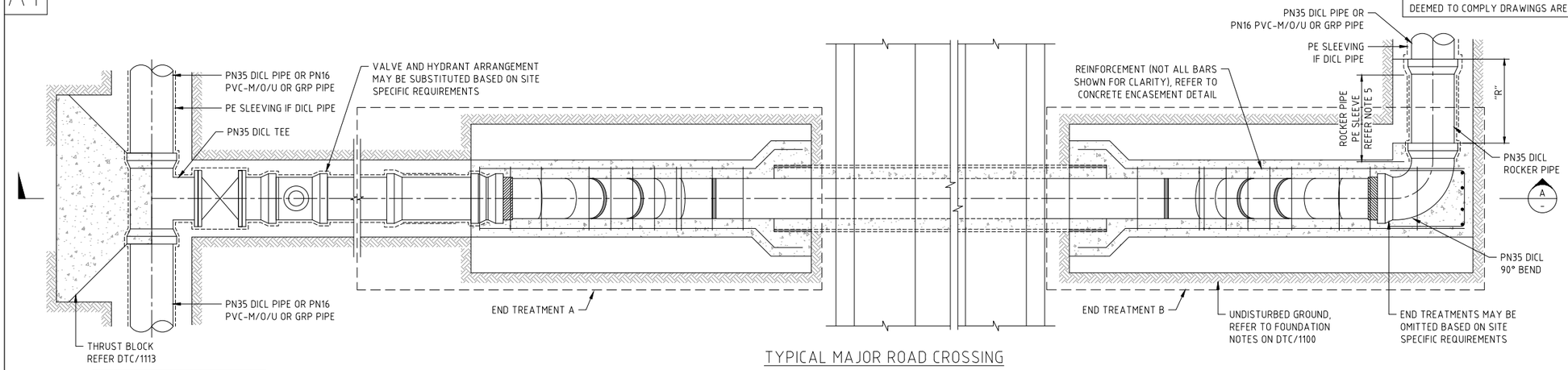

DESIGNER MUST CONSIDER LOCATION OF VALVES FOR FUTURE OPERATIONS AND MAINTENANCE.

TYPICAL MAJOR ROAD CROSSING
SCL PIPE INSIDE ENCASING PIPE

SCALE 1:20

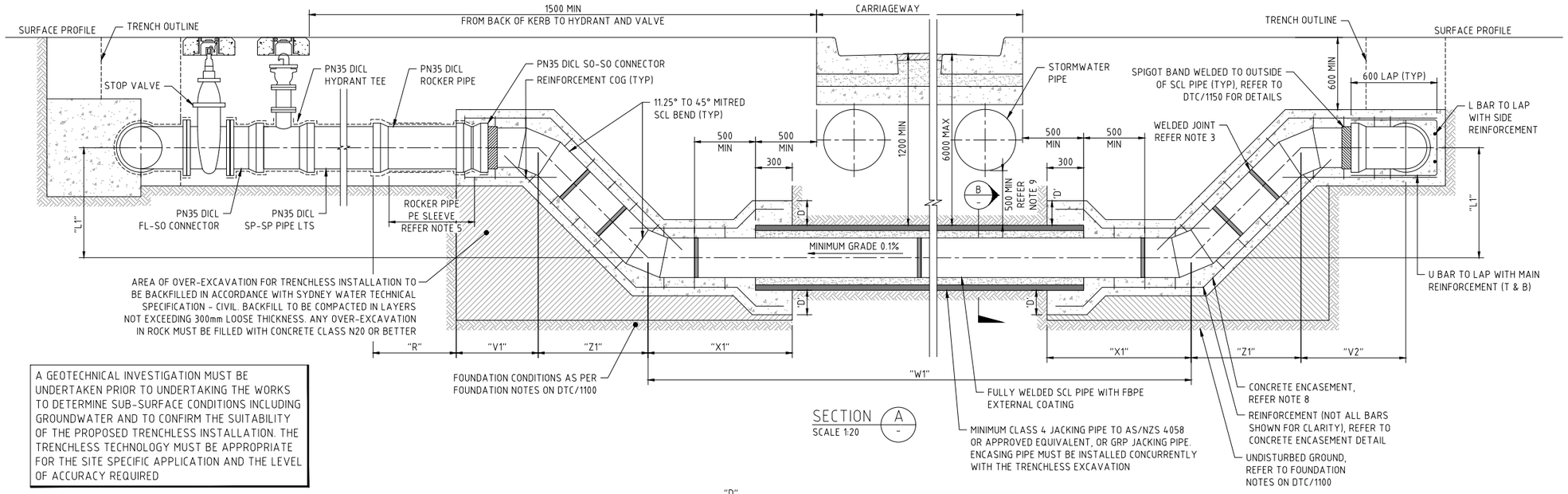

A GEOTECHNICAL INVESTIGATION MUST BE UNDERTAKEN PRIOR TO UNDERTAKING THE WORKS TO DETERMINE SUB-SURFACE CONDITIONS INCLUDING GROUNDWATER AND TO CONFIRM THE SUITABILITY OF THE PROPOSED TRENCHLESS INSTALLATION. THE TRENCHLESS TECHNOLOGY MUST BE APPROPRIATE FOR THE SITE SPECIFIC APPLICATION AND THE LEVEL OF ACCURACY REQUIRED

SECTION A
SCALE 1:20

NOTES:

1. THIS DRAWING MUST BE READ IN CONJUNCTION WITH DTC/1100.
2. THRUST RESTRAINT PROVIDED BY CONCRETE ENCASEMENT. ULTIMATE LIMIT STATE BASED ON TEST PRESSURE OF 150m HEAD OF WATER. THIS DESIGN MAY ONLY BE USED WHERE DIMENSION "L1" IS LESS THAN 2500 AND THE MINIMUM LENGTH FOR DIMENSIONS "V1" AND "X1" ARE ACHIEVED AS SPECIFIED IN THE CONCRETE REINFORCEMENT DETAILS AND THE WATER MAIN IS LAID ABOVE THE STANDING GROUNDWATER TABLE.
3. ALL STEEL PIPE JOINTS MUST BE WELDED. ALL JOINTS TO BE EITHER PLAIN ENDS WITH WELDING COLLAR, BUTT WELDED OR SLIP-IN TYPE WELDED JOINTS. REFER TO DTC/1150 AND DTC/1151.
4. SHOW DIMENSIONS "W1", "V1", "V2","Z1", "L1" AND IDENTIFY END TREATMENT FOR EACH SIDE OF CROSSING, INCLUDING DIRECTION (BEND, TEE, OR STRAIGHT) AND THE PRESENCE OF VALVES IN DESIGN AND WORK AS CONSTRUCTED DRAWINGS.
5. TAPE 700 LONG PE SLEEVING TO DICL ROCKER PIPES. SLEEVING TO EXTEND 150 INTO CONCRETE ENCASEMENT.
6. MINIMUM CLEAR COVER TO REINFORCEMENT MUST BE 70mm.
7. DO NOT APPLY ANY THRUST LOADS FOR AT LEAST 14 DAYS AFTER POURING CONCRETE.
8. CONCRETE ENCASEMENT MUST BE COMPLETED IN A SINGLE POUR WITH NO CONSTRUCTION JOINTS.
9. GREATER CLEARANCES MAY BE REQUIRED. THE CLEARANCE REQUIREMENT FOR ALL SERVICES AND ADDITIONAL CONTROLS FOR TEMPORARY SUPPORT OF OTHER EXPOSED UTILITIES MUST BE DETERMINED IN CONSULTATION WITH THE RELEVANT UTILITY AUTHORITY AND WITH SITE SPECIFIC SAFETY CONSIDERATIONS.
10. DESIGNER TO CONSULT WITH THE ROAD AUTHORITY AND COMPLY WITH THE RELEVANT ROAD AUTHORITY'S REQUIREMENTS, INCLUDING ADDITIONAL CONTROLS FOR TEMPORARY SITE WORKS.
11. ADDITIONAL FITTINGS MAY BE REQUIRED FOR DISINFECTION AND OZONATION PURPOSES.
12. TRENCHLESS CONTRACTOR TO DETERMINE JACKING FORCES AND CONFIRM WITHIN ALLOWABLE LIMITS.
13. GROUT TO HAVE A MINIMUM COMPRESSIVE STRENGTH 0.3 MPa AND MAXIMUM 1.5 MPa AT 7 DAYS. TESTING TO BE IN ACCORDANCE WITH AS 1012.9:2014.
14. DESIGNER TO UNDERTAKE SETTLEMENT ANALYSIS AND GROUNDWATER IMPACT ASSESSMENT IN CONSULTATION WITH THE ROAD AUTHORITY.

REFERENCE DRAWINGS:

DTC/1100	WATER MAIN CONSTRUCTION NOTES
DTC/1113	THRUST BLOCK DETAILS DICL AND PVC WATER MAINS ≤DN300 TEES
DTC/1150	STEEL WATER MAINS DN150 TO DN1200 STEEL PIPE JOINTING
DTC/1151	STEEL WATER MAINS DN150 TO DN1200 STEEL PIPE JOINTING WELDED - PLAIN ENDS

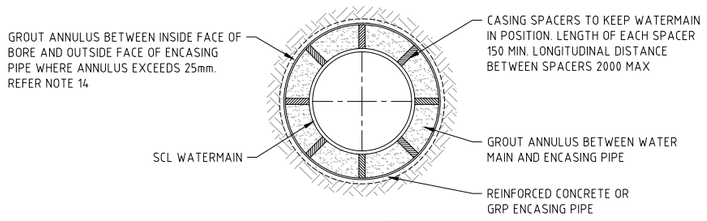

SECTION B
SCALE 1:10

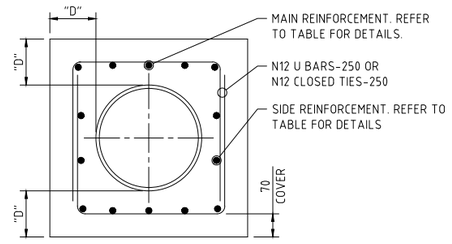

CONCRETE ENCASEMENT DETAIL

SCALE 1:10

STEEL WATER MAINS			ENCASING PIPE	
PIPE SIZE (DN)	OUTSIDE DIAMETER (OD)	WALL THICKNESS (WT)	NOMINAL SIZE (DN)	INTERNAL DIAMETER (ID) MIN.
150	168	5.0	225	229
200	219	5.0	300	292
250	273	5.0	375	369
300	324	5.0	450	445

CONCRETE ENCASEMENT REINFORCEMENT DETAILS						
MAIN SIZE	"L1"	"V1" MIN	"X1" MIN	MAIN REO (T&B)	SIDE REO (T&B)	"D" MIN
DN150	0-2500	750	800	4N24	NIL	200
DN200	0-2500	750	800	5N20	NIL	250
DN250	0-2500	1000	1000	5N20	2N16	300
DN300	0-2500	1500	1000	5N24	2N16	300

REFER NOTE 2

ROCKER PIPE DIMENSIONS		
PIPE SIZE (DN)	"R" MIN	"R" MAX
150	300	450
200	400	600
250	500	750
300	600	900

Sydney WATER

© COPYRIGHT
STATE OF NEW SOUTH WALES THROUGH SYDNEY WATER CORPORATION. ALL RIGHTS RESERVED

APPROVED

NORBERT SCHAEPER
ENGINEERING MODERNISATION MANAGER

ENGINEERING & TECHNICAL SUPPORT

LETTER	DETAILS OF ISSUE / AMENDMENT	APP'D	DATE
B	GENERAL UPDATE	NS	31/07/24
A	ORIGINAL ISSUE	PNG	31/01/12

DEEMED TO COMPLY DRAWINGS

MAJOR ROADWAY CROSSING
WATER MAINS ≤DN300
TYPE 2 - TRENCHLESS INSTALLATION
SCL MAIN IN ENCASING PIPE

DTC
1121

ISSUE	DATE
B	31/07/24