A1

THIS DRAWING MAY ONLY BE USED IN THE COURSE OF AND FOR THE PURPOSE OF CREATING SYDNEY WATER ASSETS. USE THIS DRAWING WITH CARE. THE USER IS RESPONSIBLE FOR THE CORRECT APPLICATION OF THIS DRAWING. DEEMED TO COMPLY DRAWINGS ARE SUBJECT TO TERMS AND CONDITIONS OF USE AS PUBLISHED BY SYDNEY WATER.

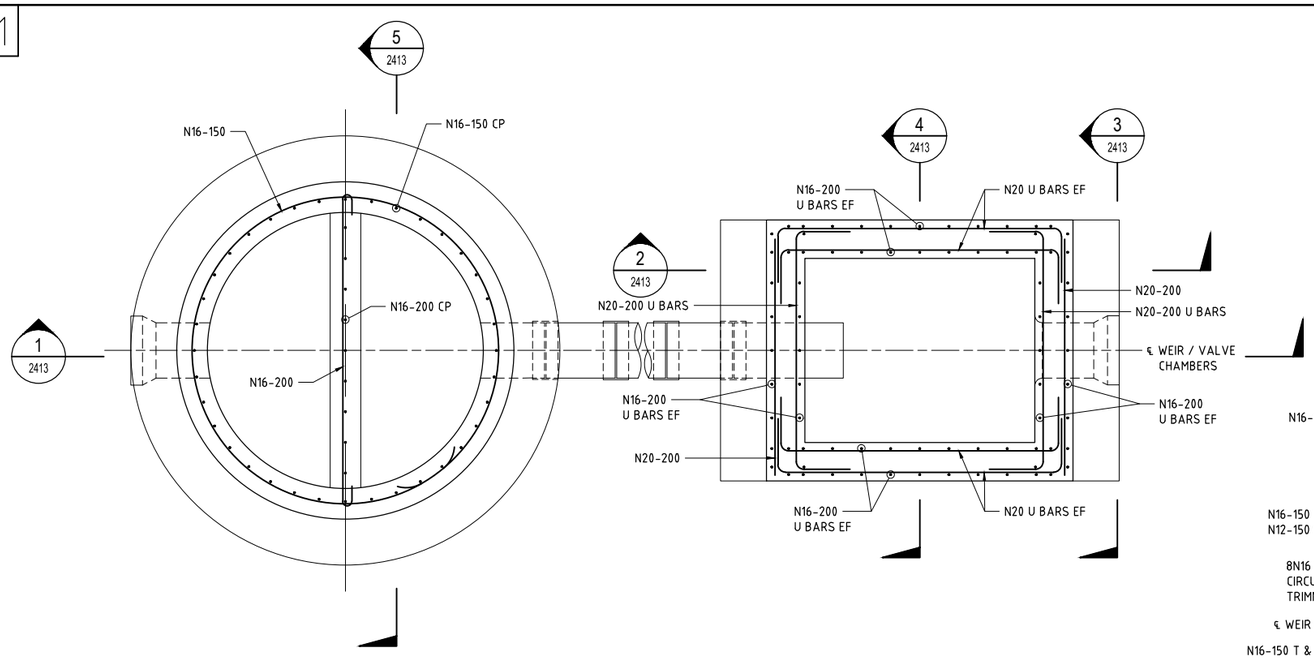

ARRANGEMENT 2B - TYPICAL WALL REINFORCEMENT PLAN

SCALE 1:20

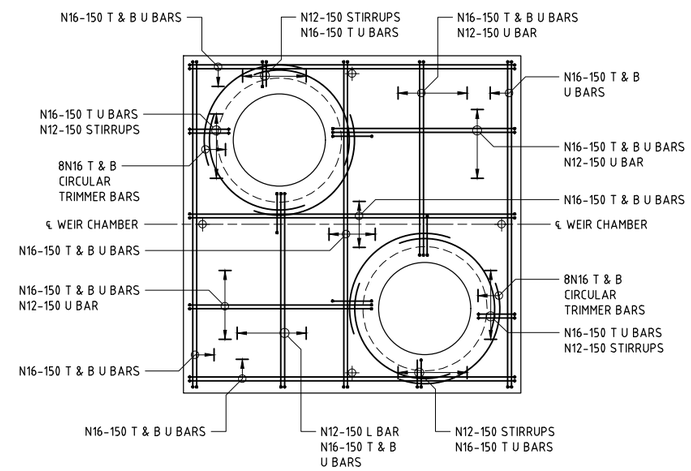

WEIR CHAMBER

ROOF SLAB REINFORCEMENT LAYOUT (FOR BOTH PRECAST OR CAST IN-SITU)

SCALE 1:20

REFER TO NOTE 5

NOTES:

1. THIS DRAWING SHALL BE READ IN CONJUNCTION WITH THE FOLLOWING:
   a. DTC/2000 - MAINTENANCE HOLES, CONSTRUCTION NOTES
   b. DTC/2251 - MAINTENANCE HOLES, PRECAST DN1050-DN1200, NOTES, INSTRUCTIONS AND DRAWING LIST
   c. DTC/2401 - EMERGENCY RELIEF STRUCTURE: INSTRUCTIONS, GENERAL NOTES & DRAWING LIST
   d. DTC/2404 - EMERGENCY RELIEF STRUCTURE: ARRANGEMENT 2B - NEW WEIR & VALVE CHAMBERS (SEPARATE STRUCTURES), GA & SECTION
   e. DTC/2413 - EMERGENCY RELIEF STRUCTURE: ARRANGEMENT 2B - STRUCTURAL REINFORCEMENT DETAILS SHEET 2 OF 2.
2. AN AMOUNT OF REINFORCEMENT EQUIVALENT TO THAT TRUNCATED BY OPENINGS SHALL BE ADDED LOCALLY TO THE SIDES OF THE OPENING AT A SPACING OF 4 x BAR DIAMETER.
3. REFER TO DTC/2000 FOR CAST IN-SITU CONCRETE AND REINFORCEMENT NOTES.
4. REFER TO DTC/2251 FOR PRECAST CONCRETE AND REINFORCEMENT NOTES.
5. REFER TO DETAIL 'G' OR 'H' ON DTC/2409 FOR TYPICAL ROOF CONNECTING TO CHAMBER WALL DETAIL.
6. REQUIRED CONCRETE CLASS S40.
7. REQUIRED CONCRETE COVER TO REINFORCEMENT: INTERNAL FACES 75 mm, FACES AGAINST GROUND 45 mm.
8. PREPARATION OF SURFACE AT CONSTRUCTION JOINTS TO COMPLY WITH SECTION C3.13.2 OF TECHNICAL SPECIFICATION – CIVIL: DOCUMENT No. CPDMS0023. THE SURFACES OF PREVIOUSLY PLACED CONCRETE AT CONSTRUCTION JOINTS MUST BE ROUGHENED BY REMOVING ALL LOOSE AGGREGATE, LAITANCE AND SUFFICIENT MORTAR TO EXPOSE AGGREGATES TO A DEPTH OF 3 mm.

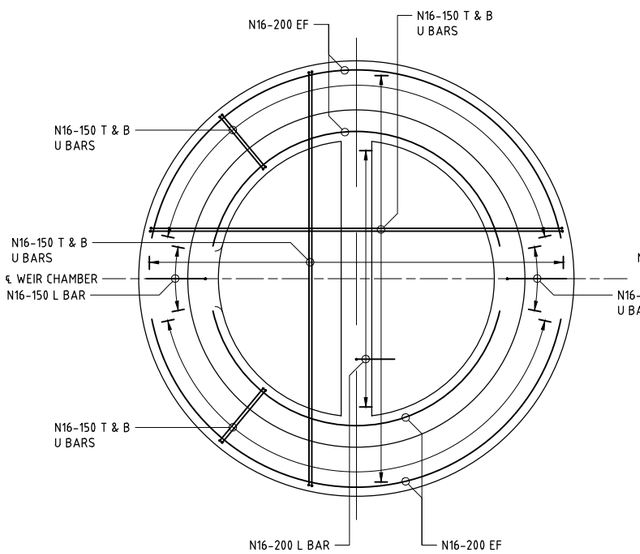

WEIR CHAMBER

BASE SLAB REINFORCEMENT LAYOUT

(SECTION JUST BELOW PIPE INVERTS)

SCALE 1:20

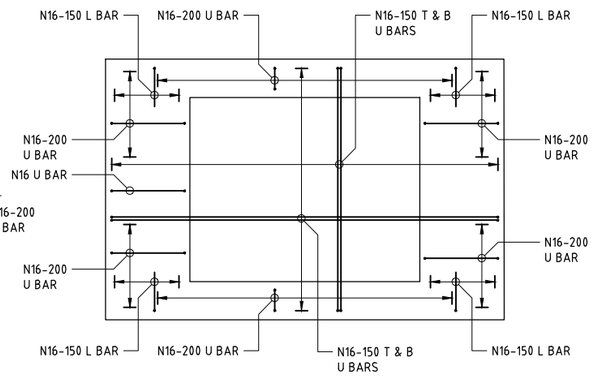

VALVE CHAMBER

BASE SLAB REINFORCEMENT LAYOUT

(SECTION JUST BELOW PIPE INVERTS)

SCALE 1:20

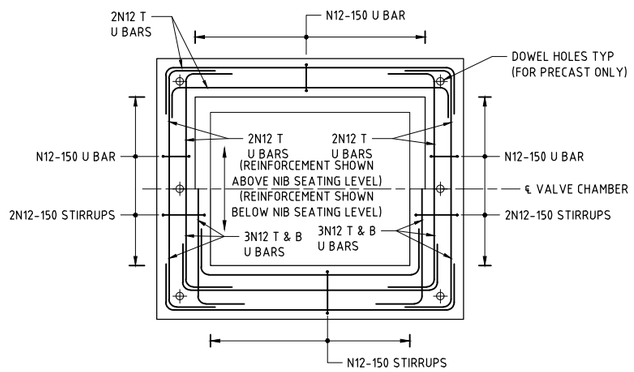

VALVE CHAMBER

ROOF SLAB REINFORCEMENT LAYOUT (FOR BOTH PRECAST OR CAST IN-SITU)

SCALE 1:20

REINFORCEMENT IS SYMMETRICAL ABOUT ℄ VALVE CHAMBER REFER TO NOTE 5

Sydney WATER

© COPYRIGHT
STATE OF NEW SOUTH WALES THROUGH SYDNEY WATER CORPORATION. ALL RIGHTS RESERVED

APPROVED

DINESH DINESHHARAN

MANAGER - ENGINEERING

ENGINEERING & TECHNICAL SUPPORT

LETTER	DETAILS OF ISSUE / AMENDMENT	APP'D	DATE
A	ORIGINAL ISSUE	D.D.	14/09/21

DEEMED TO COMPLY DRAWINGS

EMERGENCY RELIEF STRUCTURE ARRANGEMENT 2B - NEW WEIR & VALVE CHAMBERS (SEPARATE STRUCTURES) - STRUCTURAL REINFORCEMENT DETAILS SHEET 1 OF 2

DTC 2412

ISSUE	DATE
A	14/09/21